FEC IN OPTICAL COMMUNICATIONS

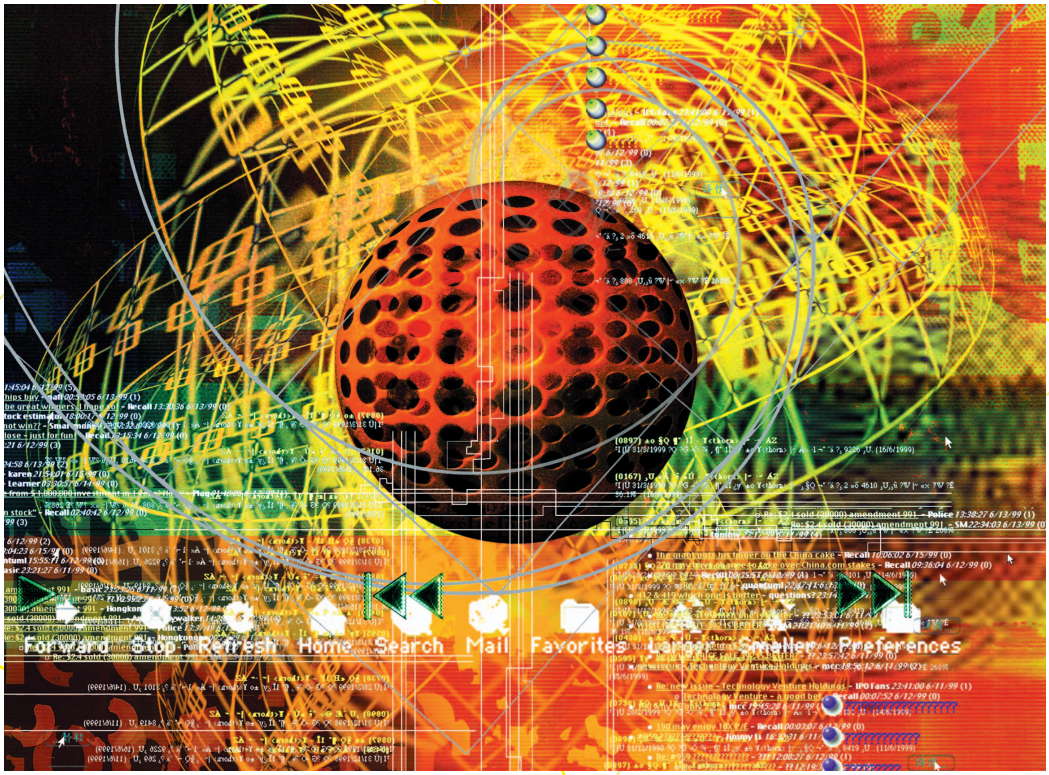

© DIGITALVISION

A Tutorial Overview on the Evolution of Architectures and the Future Prospects of Outband and Inband FEC for Optical Communications

Afxendios Tychopoulos, Odysseas Koufopavlou and Ioannis Tomkos

The recent establishment of the 10/40 Gbps technology in DWDM optical links heralds a new era of bandwidth abundance, in response to an explosive growth of services provided through the Internet. Forward error correction (FEC) is one of the key-enabling elements in this long-awaited achievement. Borrowed from the wireless world, FEC was initially introduced in wavelength-division multiplex (WDM) optical-systems to combat amplified spontaneous emission (ASE), a form of noise native in optical amplifiers (OAs). These first generation FEC systems have been associated with a coding-gain of approximately 6 db. However, as transmission rates gradually scaled towards 10 Gbps, other optical-impairments gained in significance, primarily nonlinear (NL) effects but also chromatic-dispersion (CD) and polarization mode dispersion (PMD). FEC turned out to be invaluable in mitigating these impairments as well. A second generation of FEC systems emerged—characterized by a coding-gain of approximately 8 db [1].

As optical-networks grew larger and faster (towards 40 Gbps technology), economics imposed another constraint: optical-transparency, i.e., the elimination of optoelectronic conversions (for 3R signal regeneration) to the maximum possible extent. In the absence of technological maturity for an all-optical signal-regeneration, strong end-to-end FEC is once more the primary method for building optical networks of maximum transparent-reach. Accordingly, 3rd

8755-3996/06/$20.00 ©2006 IEEE

generation FEC methods have been demonstrated, yielding coding-gains in excess of 10 db [2].

A remarkable variety of FEC systems hold a share in today's market of optical communications. They differ in a number of respects, such as transmission overhead (redundancy), implementation complexity, coding-gain, BER-performance, burst-error correction ability, etc. Hybrid-schemes, combining inband/outband FEC with advanced line-coding formats and equalization-methods, are a particularly active research topic. In this article, we present and discuss the most representative architectures of 1/2/3-g outband and inband FEC schemes. We also comment on FEC performance, we refer to actual chipsets and examine future prospects.

FEC FUNDAMENTALS

The primary specification of a FEC code is the ordered (n,k) pair, where n denotes the length of a coded message and k denotes the length of the enclosed input-data (payload). The units of these lengths are termed code-symbols. In its very basis, FEC-encoding is the act of associating redundant code-symbols (parity) with input code-symbols, to produce code-words. Encoding ensures that the output codewords differ by a minimum number of code-symbols, which is the minimum distance of the code ($d_{\min}$). At the transmitting end, the rate of information is increased accordingly by $R = 1/r$. The ratio r, defined as $r = k/n$, is called the code-rate. The receiving end undertakes the following two tasks: i) Error-detection, to verify the association between input- and parity-data and ii) Error-correction, to take actions accordingly; these tasks together comprise FEC decoding. In general, lower r entails a higher potential for successful corrections, but it also impacts the overall implementation cost severely.

Some essential distinctions of FEC codes are:

Outband Versus Inband

Generally, to achieve strong, payload-agnostic FEC, the line-rate must be increased in accordance with the FEC-rate. This is the usual mode of operation, called outband FEC. Alternatively, if the client-signal contains superfluous overhead (OH), parity code-symbols can be accommodated therein. Such inband modes of operation preserve the line-rate, rendering link-quality upgrades affordable. Notably, inband and outband modes may coexist in a link, complementing each other. The SDH (SONET) standards define an abundance of OH that could be used for inband-coding and yet remain in compliance with the Reduced SOH functionalities interface of the ITU-T G.707 recommendation.

Hard Versus Soft-Decision

The decision of a receiver upon the value of a single bit of information is called hard, when concluding with either 0 or 1. Rather, if the receiver recognizes intermediate levels between the logical values 0 and 1, it is called a soft-decision receiver. Soft-decisions can be exploited by appropriate FEC coding. Even with as few as 8 evenly distributed quantization levels, the latter approach exhibits roughly a 2 db coding-gain advantage over the hard-decisions. Nonetheless, soft-decision receivers are not commonplace in optical communications, because of technological complications related to the very high transmission rates [2] and the fact that designers are primarily concerned with maximum unregenerated spans, which in practice imposes the use of hard-decision receivers with very high-sensitivity.

Block Versus Convolutional

FEC codes with finite- and constant-length codewords are called block-codes. Codewords of length n are formed by associating $n - k$ parity code-symbols with k input code-symbols. Over the past decades, a wealth of methods has been invented for their decoding [3]. These are mostly algebraic i.e., involve closed-form mathematical formulas with vectors and/or polynomials. With the rediscovery (1995) of Low-Density Parity-Check (LDPC), a very general class of block-codes with excellent corrective qualities, very efficient iterative decoding methods are now available for some block-codes as well.

On the other hand, convolutional-codes have the property to apply over input-data in a continuous

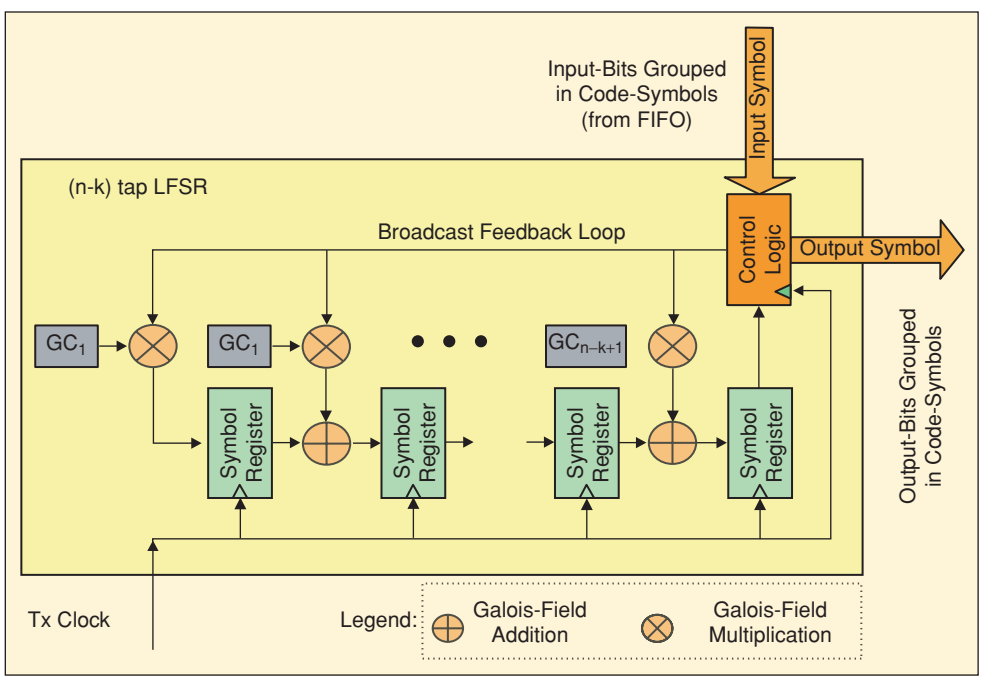

1. Reed-Solomon encoding circuit.

manner [4]. The concept of codewords is not as straightforward in this case: Input code-symbols fall into the same codeword, until a decision is made to switch to the next codeword. For instance, when input-data are exhausted or when some convolutional code is applied on data that happen to arrive in the form of blocks. Importantly, the state of the convolutional encoder has to be returned to its initial value, before processing a new codeword. This initialization-step is called trellis-termination. Resulting codewords have unequal lengths, even if input-data have the same length; shorter codewords are implicitly prolonged to the maximum length by assuming extra input-data that do not cause the encoder to depart from its initial state [5]. Convolutional decoding generally involves direct computations with probability-estimates, the two most widely adopted algorithms being: 1) Viterbi (maximum-likelihood codeword) [4] and 2) Bahl, Cocke, Jelinek and Raviv (BCJR) [symbol by symbol maximum a posteriori (MAP)] [6].

Serial Versus Parallel-Concatenation

Concatenation of FEC codes is an intuitive method to increase FEC effectiveness. With serial-concatenation, input-data are encoded in succession by an outer (h,k) code and next by an inner (n,h) code, to produce a concatenated (n,k) coding-scheme. It is the designer's intention that the corrective properties of the outer code match the error-statistics on failure of the inner code. In particular, a very effective combination results from a convolutional inner code and a Reed-Solomon outer block-code; the decoding-errors of the former have a natural tendency to manifest themselves as error-bursts, which can be effectively dealt with by the latter. On the assumption of burst-errors generated by the inner code, it is standard practice to place an interleaver between the two serially-concatenated FEC codes. Interleavers spread the decoding-errors of the inner code, so that no single codeword of the outer can be easily overwhelmed by these errors.

The advent of Turbo-coding was a major historical breakthrough in error-control coding (1993). The iterative-decoding of two codes in parallel-concatenation was introduced for the first time. With parallel-concatenation, the same input-data are encoded twice (or more), once in the order of arrival and again in permuted order. The permutation is effected be means of an interleaver. The underlying Turbo-principle suggests that iteratively decoding, once for each order-of-encoding, converges to the Maximum-Likelihood (ML) codeword [7]; errors that might overwhelm decoding in one order could become correctable in another order. The importance of Turbo-codes was underlined by a performance demonstration within 0.5 db from the channel-capacity.

FEC ARCHITECTURES

Representative FEC architectures are outlined in this section, with emphasis on the evolution from classic first generation methods to modern super-FEC schemes.

First Generation Outband FEC (Single Code)

Reed-Solomon (RS) codes are Maximum Distance Separable (MDS) and suitable for burst-form errors, because of their

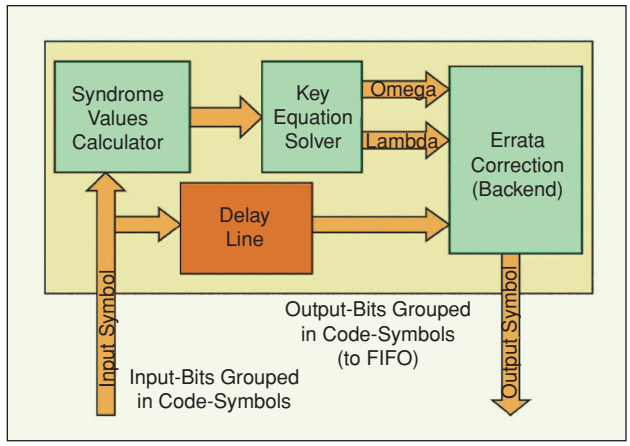

2. Reed-Solomon decoding stages.

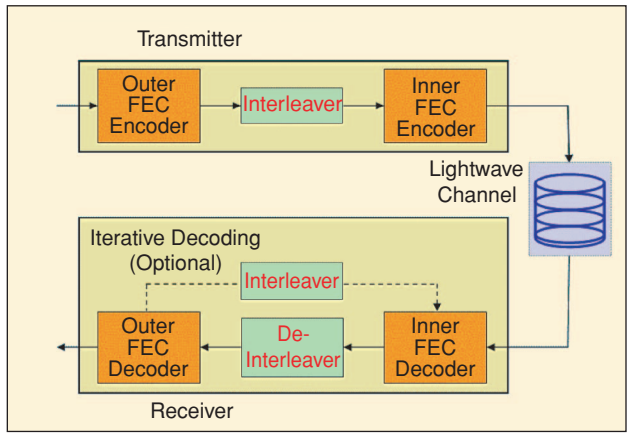

3. Serial FFC concatenation (product codes).

nonbinary structure [3]. An extensive experience on the corrective properties of RS codes (compact disks, wireless/satellite links, deep space missions) made them a natural first choice for the enhancement of optical links. More specifically, ITU-T study-group 15 issued recommendation G.975 (1996) on the use of RS(255,239) for optical submarine communications. Later, with the advent of Optical Transport Networks (OTN), the same code was proposed again for OTN Inter-Domain Interfaces in ITU-T recommendation G.709 (2003).

By definition, the minimum (Hamming) distance $d_{\min}$ of any RS code is equal to $n-k+1$ code-symbols, ensuring that any distorted symbols E in a code-word are detectable up to $n-k$ and correctable up to $(n-k)/2$; in these formulas, if $n-k$ is odd, it must be decremented by 1. It is noteworthy that code-symbols, marked by the receiver as erasures e, double the corrective ability of the RS code, making $2E+e \leq n-k$ the condition for successful corrections.

RS codes are cyclic, when in full length ($n_{\max}$). Even when shortened however ($n < n_{\max}$), they still have the implementation-benefits of cyclic codes, assuming all truncated symbols as zero. The circuit, used almost exclusively for encoding, is an $n-k$ taps Linear Feedback Shift Register (LFSR) (Figure 1). Its purpose is to impose the $n-k$ distinct algebraic roots (AR_i) of a constant polynomial g(x) to the output codewords, which are also treated as polynomials. The polynomial g(x), called the

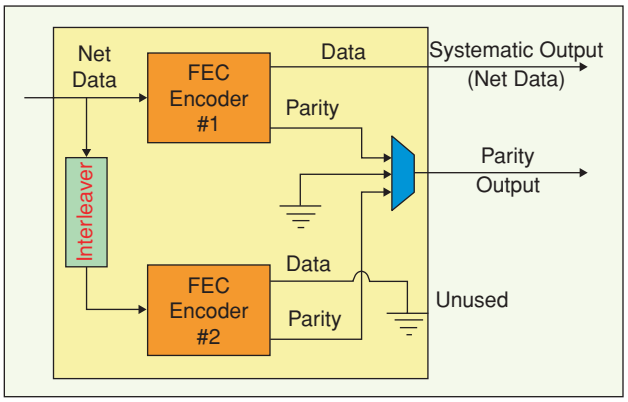

4. Parallel-concatenated FEC encoders.

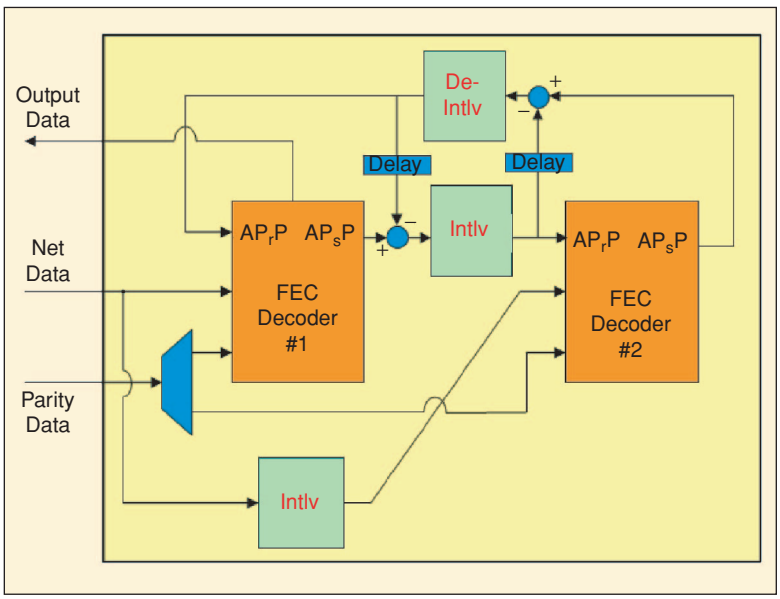

5. Iterative (Turbo) decoding of parallel-concatenated codes.

code-generator polynomial, identifies the code uniquely. Its coefficients (CG_i) are related to the algebraic-roots (AR_i) through the formula:

$$g(x) = \prod_{i=1}^{n-k}(x - AR_i) = \sum_{i=0}^{n-k}(GC_i \otimes x^i).$$

The decoding of RS codes has been inherited from their super-class, Bose-Chaudhuri-Hocquenghem (BCH) codes [8]. Its performance is suboptimum with regard to ML decoding: the decoder selects the codeword that is the closest match to the received word (bounded distance decoding). It is typically a 3-stage procedure (Figure 2): In the first stage (syndrome-values calculator), it is verified, whether the roots (AR_i) of g(x) still hold in the received-codeword. A set of numbers, called syndrome-values (SV), are computed and communicated to the next stage. When all SV are zero, the received word is recognized as a codeword and decoding ceases, otherwise decoding proceeds with the second stage (key-equation solver). In this stage, the error-locator λ and the error-corrector ω polynomials are formulated with respect to the SV. The roots of λ indicate, which symbols in the codeword have been distorted by the channel (if erasure indications are available, λ is initialized appropriately). The most efficient algorithms for finding λ and ω in a constant number of iterations are: 1) the Berlekamp-Massey and 2) the Euclidean. Finally, the 3rd stage (backend) employs a brute-force algorithm (Chien-search) to find the error-locations by solving the $\lambda = 0$ equation, utilizing ω to compute the applicable corrections.

A widely used approach in RS coding, also included in the above ITU-T recommendations, is the code-symbol interleaving of a number of individual RS-codes, for instance 16-way interleaved RS(255,239) codes in the case of G.709. The quite obvious reason for interleaving is the distribution of channel errors to all partial codes in the FEC scheme, so that no single one of them is overwhelmed by these errors. There is however a less obvious motivation behind this choice: In implementing the feedback-loop of the encoder (Figure 1), broadcasting the feedback data to all $n - k$ constant-multipliers results in a high fan-out VLSI network and consequently, high propagation delay. The more roots g(x) has (i.e., greater $n - k$), the higher is this propagation delay. Because of this shortcoming, having a single encoder to operate at line-rate may be impossible or may demand more expensive manufacturing technology. With many encoders operating in parallel (X-way interleaved), each one is conveniently operable at a fraction 1/x of the line-rate.

First-generation systems are a well-established technology in today's market, mainly targeting IR/LR applications. They are expected to yield a coding-gain near 6 db at an output BER of 10^{-12}, as evidenced by ITU-T G.709-compliant products (10 Gbps), for instance: Intel IXF30005, AMCC HUDSON 2.0 and AMCC RUBICON-Metro.

Second Generation Outband FEC (Concatenated)

Propelled by the increasing maturity of DWDM systems, diverse FEC-concatenation schemes made their appearance in the market. Some of them found their way to standardization, as of ITU-T recommendation G.975.1 (2004). The clear performance-advantage over classic FEC and the common element of serial FEC concatenation put these schemes under the umbrella of second generation FEC systems for optical communications.

Serial-concatenation of FEC codes is outlined in Figure 3. Notice the presence of an interleaver between the outer and the inner encoder; a corresponding de-interleaver is placed between the outer and the inner FEC decoder accordingly. The performance of the concatenated scheme is strongly related to the choice of the interleaving type and depth. The objective of interleaver design is to minimize/eliminate the weak (low-weight) codewords.

Decoding separately and in succession the inner and the outer code is the rule, but not ML; ML decoders for concatenated schemes are of prohibitive complexity. On the contrary, iterative decoding is a practical method to construct very effi-

cient decoders; it can be optionally employed to enhance the coding-gain without requiring extra code-redundancy, as shown in the above figure. Decoding iterations have diminishing returns. Consequently, only a few of them (3–5) are generally sufficient to get the most out of codewords. Noteworthy is that most real systems cannot handle the high optical rates, unless they resort to loop unfolding i.e., use multiple instances of FEC decoders, which significantly increases the cost of implementation.

A prominent representative of second generation FEC schemes can be found in [1] and also in clause I.3 of ITU-T recommendation G.975.1 (2004). This super-FEC is a concatenated scheme with BCH(3860,3824) as the outer and BCH(2040,1930) as the inner code. The total redundancy amounts to 6.69%, keeping rate-compatibility with G.709. It provides 7.98 dB net coding gain at an output BER of 10^{-12}, by using 3 times iterative decoding. Even higher coding-gains (up to 9 db) are claimed by products that employ FEC concatenation, such as: Intel IXF30007, AMCC NIAGARA (10 Gbps) and CoreOptics CO40FEC10 (40 Gbps). The extra coding gain of these products is nonetheless at the expense of a higher code- and line-rate (up to 30%).

3rd Generation Outband FEC (Super-FEC)

Although a breakthrough in their own right, it was soon realized that second generation FEC schemes do not achieve the required system margin for some important ULH links (e.g., transpacific) [2], [9]. This conclusion directed the relative research towards even stronger FEC methods. Today's state-of-the-art methods are registered as 3rd generation FEC, mostly relying on Turbo and Low-Density Parity-Check (LDPC) coding concepts; they also leverage iterative decoding to obtain realizable receivers and achieve very high coding-gains.

More specifically, the original Turbo architecture combines two encoders in parallel-concatenation [7]; the rule is that they implement the same code. The first encoder applies on the incoming data-symbols in their order of arrival, whereas the second one applies on the same data but in permuted order (Figure 4). An interleaver permutes the data-order. Noticeably, the input-data are transmitted only once, multiplexed with parity-data from both encoders. The constituent codes need to be punctured, in order to control the code-rate, hence the MUX at the output. With regard to interleaving, the same considerations hold as with serially concatenated FEC.

Turbo decoders operate on the Turbo principle [7] of iterative decoding (Figure 5). Constituent decoders must be Soft-Input-Soft-Output (SISO) i.e., capable of co-processing unequal a priori probabilities (APrP) of the incoming code-symbols and generating a posteriori probabilities (APsP) in return. For trellis-based Turbo codes, the major SISO decoding algorithm is the MAP of BCJR [6], [10].

Both constituent decoders shown are fed with the same input-data and the corresponding parity. However, input-data enter the first decoder in the order of arrival and the second one in permuted order. The execution of the first iteration in each decoder is on a zero-knowledge basis. On the contrary, next iterations take into account reliability information from

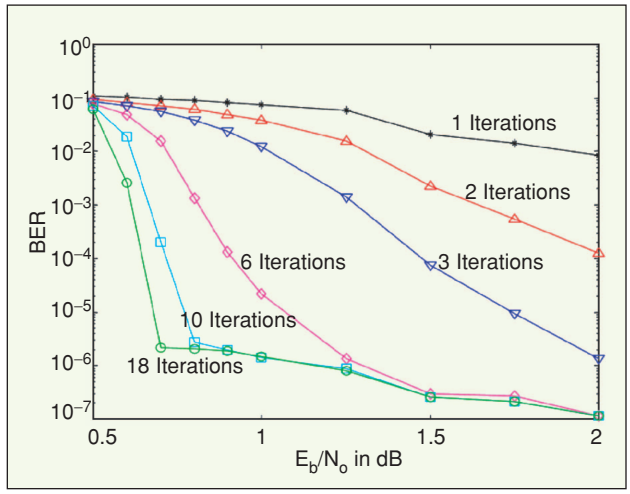

6. BER improvement versus decoding iterations (Turbo code, rate ½, block size 65536).

the previous ones, called extrinsic information. Extrinsic is the net contribution of a single decoding session computed as the symbol-by-symbol difference APsP-APrP. The exchange of extrinsic information between decoders takes place through appropriate interleaving/de-interleaving. This repetitive process can render correctable channel-data that would otherwise cause error-overflow. Under normal channel conditions, this iterative algorithm converges towards the ML solution; returns are however diminishing (Figure 6). The real-time character of optical networks imposes that the algorithm is terminated after a fixed number of iterations, properly chosen so that more of them wouldn't incur any significant improvement.

No matter the excellent performance of Turbo, these codes are not second to none. LDPC codes have in many cases demonstrated superior characteristics [11]. LDPC are linear block codes and are consequently fully defined through their parity check matrix H. The latter must be characterized by sparseness i.e., a small number of nonzero entries. In binary LDPC, H is designed with a ones per column and b ones per row and as a result, each information bit is involved in a parity checks and each parity check involves b information bits. This fact gives rise to a special notation for LDPC as (a,b), in addition to the usual (n,k).

Parity checks are conveniently visualized in the form of Tanner Graphs. The association between a parity-check matrix and the corresponding Tanner Graph is presented in Figure 7. Variable nodes are initialized with the corresponding received symbols and check nodes stand for the applicable parity-checks. LDPC can be decoded with complexity O(n) with Belief Propagation (BP) algorithms, employing Soft Message Passing (SMP) techniques [12]. Two major steps are iteratively executed: i. Variable nodes communicate to check nodes their reliability (log-likelihood) and ii. Check nodes decide which variables are not reliable and "suppress" the corresponding inputs. In implementing LDPC, the bottleneck appears to be encoding, rather than decoding. To reduce the complexity of LDPC encoding to O(n), this operation can be performed by an iterative decoder instead, if properly initialized.

Turbo-codes have experimentally achieved coding-gains in excess of 10 db at 10Gbps [2]. LDPC are even more promising, reportedly contributing 11 db at 40Gbps [11]. 3rd generation FEC deployment is in its infancy; actual products have not yet been announced.

Inband FEC

ITU-T recommendation G.707 (2000) has included an Inband-FEC (iFEC) scheme, which uses a 3-bit error-correcting shortened-BCH(4359,4320) code (also referred to as BCH-3). In 2004, another inband method was proposed, called FOCUS [13]; the latter relies on the 18-bit error-correcting shortened-RS(244,240) code (9-bit wide code-symbols). With regard to the encoding and decoding of the above methods, the general principles of first generation FEC hold. iFEC coding is outlined in Figure 8.

More specifically, the outgoing data of the transmitting end must first be aligned (or framed, if not already) before encoding. Subsequently, any required modifications to the frame must take place. For instance, a necessary modification is to have the parity-data of past codewords written to the designated OH locations. Another likely modification is to update the Bit Interleaved Parity (BIP) checksums, such as B1 and B2. Next, iFEC encoding is performed on the frame-data to compute parity for its current codeword. Some further processing is required before transmission, such as the computation of BIP (B1, B2) over the current SDH frame and the scrambling of outgoing frames.

The receiving end must first obtain frame-alignment to the arriving SDH frames. Then, scrambling has to be removed and BIP statistics may be optionally collected, prior to FEC. Subsequently, the iFEC decoder extracts and temporarily stores parity-data from the SDH OH. On completion of a whole code-word's receipt, the decoder proceeds with error-detection and correction, providing error-statistics accordingly. Post to FEC, the frame may be safely accessed (accessing tributaries, etc). In particular, BIP B2 statistics can serve as a crosscheck.

There are a number of concerns, special to iFEC. Firstly, coding can be applied to a link either section-by-section (between STE) or end-to-end (between LTE). In any case, only the Regenerator- and Multiplex-Section overhead of SDH frames (RS-OH/MS-OH respectively) is used for parity-data allocation. Secondly, both approaches, G.707 and FOCUS, include remote-indication mechanisms, conveying FEC status (activation/deactivation messages), to achieve backwards compatibility with legacy-nodes. Another noteworthy issue common to the above methods is the exclusion of the parity-section of currently processed codewords from the data-section of the next ones; this is recommended, in order to save needless corrections on parity-data and use them for client-data.

The G.707 and FOCUS iFEC coding methods are incompatible with each other. The former method treats each SDH-frame row separately, whereas the latter treats three SDH-frame rows at a time. The G.707 method has a theoretical Q-factor improvement of 3.8 db and is expected

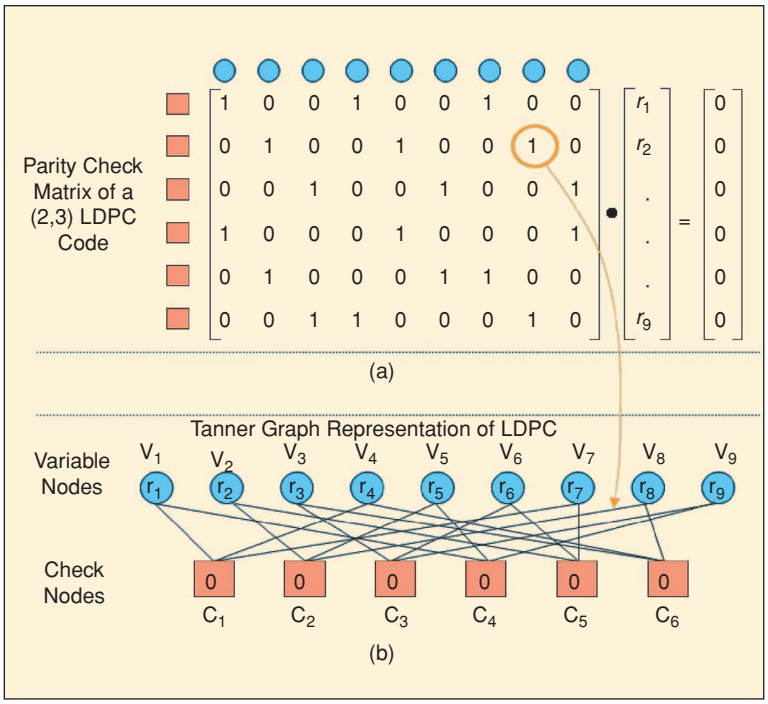

7. (a) Parity-check of a (2,3) LDPC code, (b) Corresponding Tanner-graph representation.

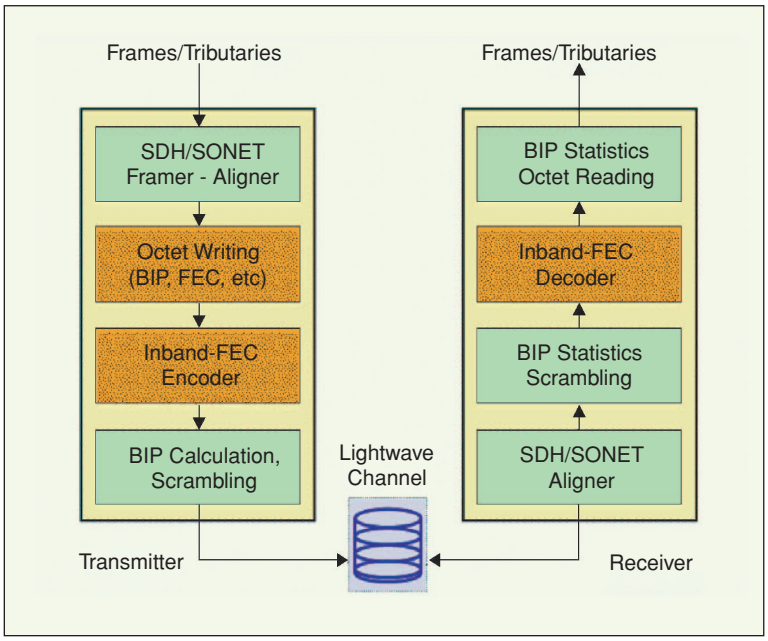

8. Inband-FEC (iFEC) over SDH STM-n.

to yield a practical coding-gain of roughly 3.0 db. Due to the use of a binary-BCH code, it is believed to be effective in combating random errors. Its main disadvantage against FOCUS is using disproportionate parity (39 bits) for only 3-bits correction. On the other hand, FOCUS is particularly effective in combating burst-errors, exhibiting a practical coding gain above 3.5 db [13]. In addition, FOCUS features two alternative modes of operation, the strong and the weak. The weak mode offers half coding-gain for half OH occupancy, providing a higher degree of flexibility in selecting the SDH OH to be used for FEC parity. Its main disadvantage against G.707 is a higher decoding-delay (83.3 μs versus 15 μs).

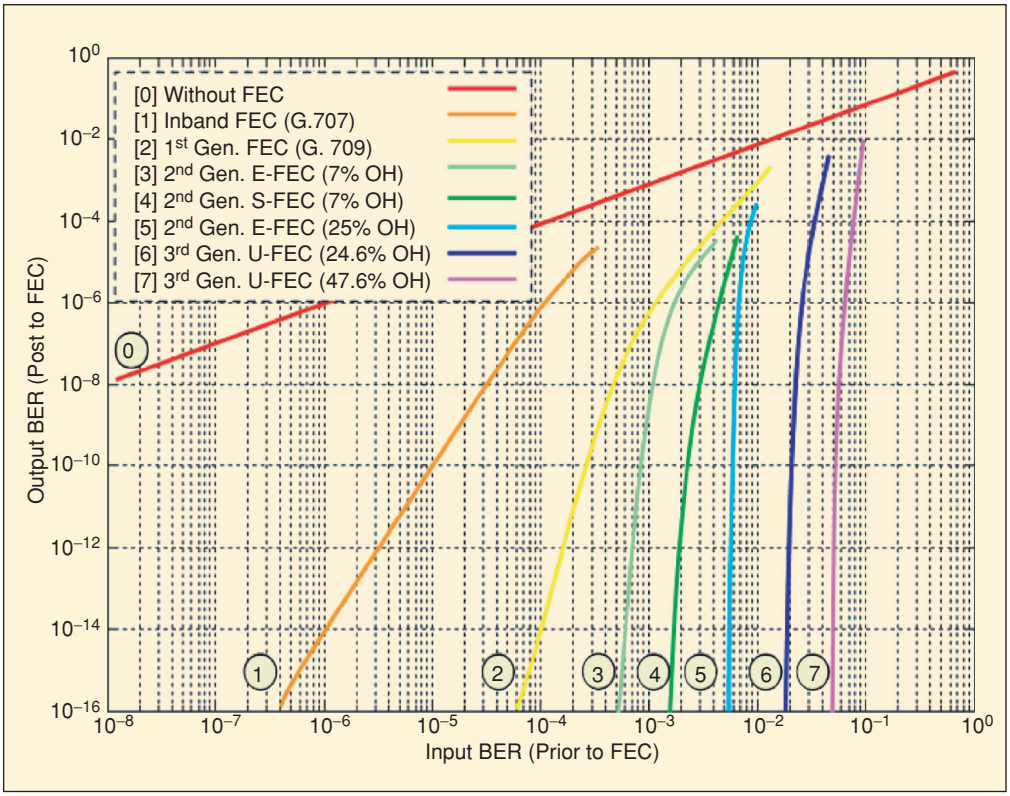

9. FEC performance evolution (4 and 6: experimental, 7: simulation, others: theoretical).

The only implementation of the ITU-T iFEC method (BCH-3) that has been found to be commercially available is Agere Systems TFEC0410G. A laboratory version of the same iFEC is reported in [14]. The lab prototype implementation of FOCUS was originally announced in [15].

PERFORMANCE EVALUATION

FEC methods are accurately characterized through BER plots that demonstrate the achievable improvement in comparison with an un-coded channel. An Additive White Gaussian Noise (AWGN) channel is generally assumed as the common reference for FEC comparisons. The following figure depicts FEC performance evolution:

A more compact measure for the comparison of FEC is coding-gain (CG), which expresses the equivalent increase in received power, required to achieve the same performance (BER) in the absence of FEC. Traditionally, CG was measured as the horizontal distance of BER_{RAW} and BER_{FEC} curves in output BER versus received power graphs, taken at a specific Output BER value (usually 10^{-12}). This approach was included in past versions of the ITU-T rec. G.975 (1996, 2000). However, the coding-gains resulting from the above definition are rather large and counter-intuitive for comparisons. Moreover, the impact of different code-rates is nonobvious. For these reasons, a new formula soon became the de-facto standard for FEC performance and was recently adopted by the G.975 recommendation (2004):

$$CG = 20\log_{10}\left[\frac{\mathrm{erfc}^{-1}(2BER_{FEC})}{(\mathrm{erfc}^{-1}(2BER_{RAW})}\right] \text{ (db)}$$

Again, an AWGN channel is assumed, if not otherwise stated (erfc^{-1} denotes the inverse function of the common error function). To take code-rate (r) into account, Net Coding Gain (NCG) is defined as:

$$NCG = CG + 10\log_{10}(r) \text{ (db)}$$

The above formulas facilitate comparisons between outband- and inband-FEC performance, taking the NCG of the former and the CG of the latter.

DESIGN CONSIDERATIONS

To be successful in terms of market acceptance, a FEC method must encompass a number of characteristics. Some important features are:

- **Processing delays:** Optical communications are particularly sensitive to delays, because of the enormous traffic and the real-time requirements of many upper-layer services (e.g., VoIP). The trade-off between implementation complexity/cost and processing delay becomes increasingly arduous, as transmission rates go higher. To obtain practical receivers, iterative decoding is of vital importance. However, the number of iterations must be carefully chosen to moderate the delays without losing a significant gain potential. Processing delays above 100 μs should be avoided.

- **Configurable redundancy:** Optical networking applications of different range require different levels of protection, with respect to the Quality of Service (QoS) and the network-route impairments. It is generally desirable that FEC rates are configurable. By decreasing the rate whenever possible (e.g., in a short-haul link), the optical path will be benefited by a denser WDM or a clear reduction of cross-channel impairments.
- **Rich statistics** FEC: is not a panacea; it is rather introduced to obtain the necessary system margin to guarantee QoS. This system margin is bound to gradually decline over time, because of the aging of components and possibly for other reasons as well, such as the later activation of extra lightwave channels. It is therefore necessary to uninterruptedly monitor the performance of optical communication links. Statistics richer than simple BER-estimates are invaluable to gain further insight into the link status. In specific, it is advisable that the error-bits corrected to 0 and the bits corrected to 1 are separately counted to help identify potential sources of problem. In addition, the codewords produced at the output of FEC decoders should be cross/re-checked for correctness. It is sensible that a decoding-failure immediately launches a major network alarm.

FUTURE TRENDS

Apart from FEC, other important technologies for optical communications are line-coding and channel-equalization. Line-coding involves the use of advanced modulation formats (RZ, duobinary and variants) for optical transmission to achieve superior tolerance against optical impairments, such as dispersion, filter-concatenation effects, inter- and intra-channel crosstalk, etc. RZ-DPSK is used in [2], offering a 3 db advantage and CSRZ-DPSK is used in [9]. Channel-equalization, on the other hand, stands for adaptive-filtering of the optical channel using a Feed-Forward filter, a Decision-Feedback filter or a ML Sequence Estimator. Both of the aforementioned technologies can be combined with FEC [2], [9], [16] to build powerful electronic end-to-end processing mechanisms that foster optical-transparency.

CONCLUSION

Three generations of FEC technologies have been spanned within not more than one decade and a half, revealing that optical communications are a very hot research topic. The intense scientific activity in the area gives us reasonable ground to believe that future optical networks will increasingly build on all-optical elements and end-to-end electronic processing. FEC is of key importance in achieving the necessary system margin to offer high QoS. Hybrid FEC schemes, combined with equalizers for electronic dispersion compensation, are expected to give rise to affordable, plug-and-play metro networks. In conclusion, optical networking is to further expand in the foreseeable future, becoming the technology of choice not only for backbone, but also for metro- and local-area networks.

REFERENCES

[1] K. Seki, K. Mikami, A. Katayama, S. Suzuki, N. Shinohara, and M. Nakabayashi, "Single-chip FEC codec using a concatenated BCH code for 10Gbps LH optical transmission systems," in *Proc. IEEE Custom Integr. Circuits Conf. 2003*, pp. 279–282.

[2] T. Mizuochi, Y. Miyata, T. Kobayashi, K. Ouchi, K. Kuno, K. Kubo, K. Shimizu, H. Tagami, H. Yoshida, H. Fujita, M. Akita, and K. Motoshima, "FEC based on block turbo code with 3-bit soft-Decision for 10Gb/s optical communication systems," *IEEE J. Select. Topics Quantum Electron.*, vol. 10, pp. 376–386, Mar. 04.

[3] E.R. Berlekamp, *Algebraic Coding Theory*. New York: McGraw-Hill, 1968.

[4] A.J. Viterbi, "Convolutional codes and their performance in communication systems," *IEEE Trans. Commun. Technol.*, vol. COM-19, pp. 751–772, Oct. 1971.

[5] G.D. Forney, Jr., "Convolutional codes I: Algebraic structure," *IEEE Trans. Inform. Theory*, vol. IT-16, pp. 720–738, Nov. 1970.

[6] A. Viterbi, "An intuitive justification and a simplified implementation of the MAP decoder for convolutional codes," *IEEE J. Select. Areas Commun.*, vol. 16, pp. 260–264, Feb. 1998.

[7] C. Berrou and A. Glavieux, "Near optimum error correcting coding and decoding: Turbo codes," *IEEE Trans. Commun.,* vol. 44, pp. 1261–1271, Oct. 1996.

[8] Forney, Jr., "On decoding BCH codes," *IEEE Trans. Inform. Theory*, vol. IT-11, pp. 549–557, Oct. 1965.

[9] T. Tsuritani, K. Ishida, A. Agata, K. Shimomura, I. Morita, T. Tokura, H. Taga, T. Mizuochi, N. Edagawa, and S. Akiba, "70-GHz-spaced 40 42.7Gb/s transpacific transmission over 9400km using prefiltered CSRZ-DPSK signals, all-raman repeaters, and symmetrically dispersion-managed fiber spans," *IEEE J. Lightwave Technol.*, vol. 22, pp. 215–224, Jan. 2004.

[10] W.E. Ryan, *A Turbo Code Tutorial*. New Mexico State Univ., 2003 [Online]. Available: http://www.nmsu.edu

[11] I.B. Djordjevic, O. Milenkovic, and B. Vasic, "Generalized LDPC codes for optical communication systems," *IEEE J. Lightwave Technol.*, vol. 23, pp. 1939–1946, May 2005.

[12] A. Shokrollahi, "LDPC codes: An introduction," *Digital Fountain, Inc.* 2003 [Online]. Available: http://www.digitalfountain.com

[13] A. Tychopoulos, I. Papagiannakis, D. Klonidis, A. Tzanakaki, O. Koufopavlou, and I. Tomkos, "Demonstration of a low-cost inband FEC scheme for STM-64 transparent metro networks," in *Proc. IEEE Intern. Conf. Transparent Optical Networks 2006*, Tu.A3.4.

[14] K. Azadet, E.F. Haratsch, H. Kim, F. Saibi, J.H. Saunders, M. Shaffer, L. Song, and Yu Meng-Ling, "Equalization and FEC techniques for optical transceivers," *IEEE J. Solid State Circuits*, vol. 37, pp. 317–327, Mar. 2002.

[15] A. Tychopoulos and O. Koufopavlou, "In-band coding technique to promptly enhance SDH/SONET fiber-optic channels with FEC capabilities," *Eur. Trans. Telecomm*, vol. 15, pp. 117–133, Apr. 2004.

[16] I.B. Djordjevic and B. Vasic., "Noise predictive BCJR equalization for suppression of intrachannel nonlinearities," *IEEE Photon. Technol. Lett.,* vol. 18, pp. 1317–1319, Jun. 2006.

Afxendios Tychopoulos and *Odysseas Koufopavlou* are with the Electrical and Computer Engineering Department of the University of Patras in Greece. *Ioannis Tomkos* is with the Athens Information Technology in Greece. E-mail: atychopoulos@ece.upatras.gr.

CD ■